Lorento Back to Wall Bath 1675mm White

Bathroom Impressions Australia Premium Lorento Back to Wall Bath 1675mm (BSE533)
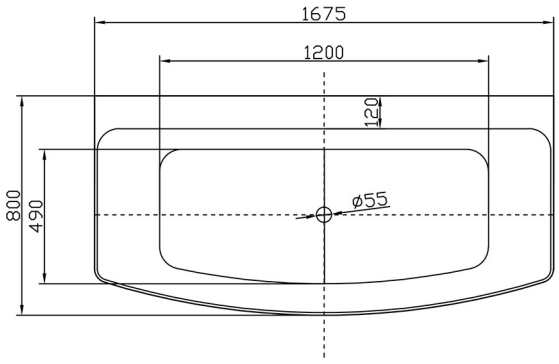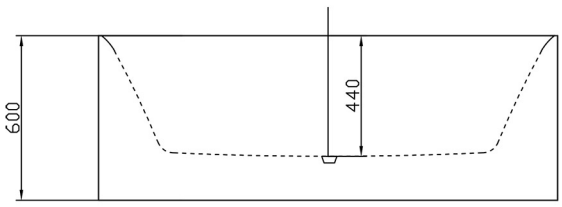
- *High gloss white finish heavy duty pure acrylic back to wall bath*
- *Size: 1675 x 800 x 600mm*
- *Fully enclosed back panel providing quality build*